Name: Roman Junes and Dylan Thornburg
Lab Number: 7
Class: ELEN 50L
Date: November 9, 2023

Laboratory 7 – Storage Devices and RC Circuits

Objectives:
• Learn the behaviors of capacitors in series
• Learn the meaning of the time constant of a simple RC circuit
• Measure the time constant of a simple RC circuit

I. Equipment:
• DC Power Supply (Keysight EDU36311A)
• Digital Multimeter (Keysight EDU34450A)
• Breadboard for connecting resistors Waveform Generator (Keysight EDU33221A) Digital Oscilloscope (Keysight EDUX1052G)
• Resistance Decade Box R
• 3 capacitors between 0.5 μF and 5 μF

II. Background & Theory
A. Capacitor and Inductor: Capacitor C and inductor L are storage devices commonly used in analog and digital circuits. The voltage and current of a capacitor or inductor are related, as shown in Figure 1. Capacitors and inductors have various sizes and shapes depending on how they are manufactured and their circuit applications.

Figure 1 – Properties of capacitor C and inductor L

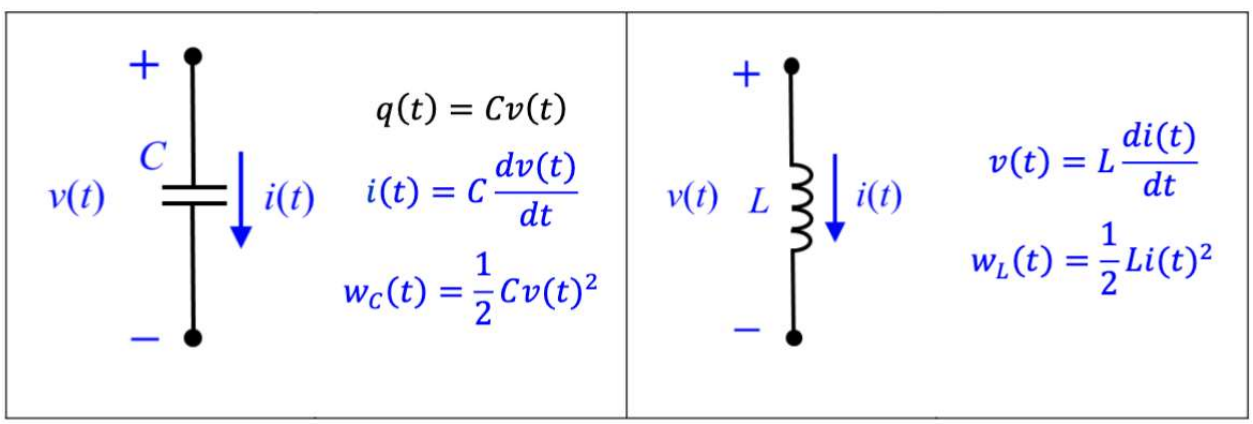

Equivalent capacitance and inductance from series and parallel connections are given in Figure 2.

Figure 2 – Equivalent Capacitance and Inductance

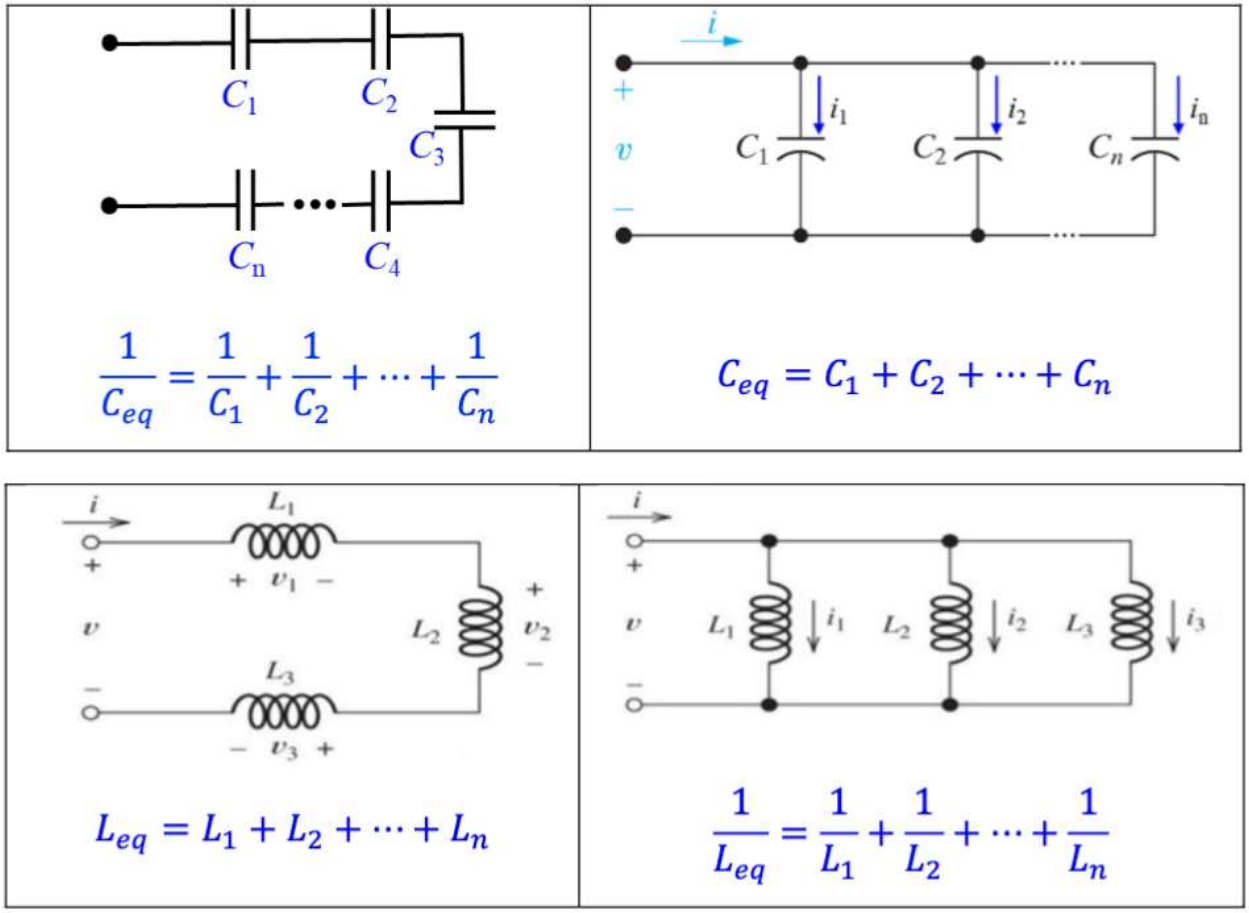

Similar to the voltage divider of a resistive circuit, capacitors in series can divide the voltage of an input source according to their capacitance, as shown in Figure 3.

Figure 3 – Voltages across Capacitors in Series

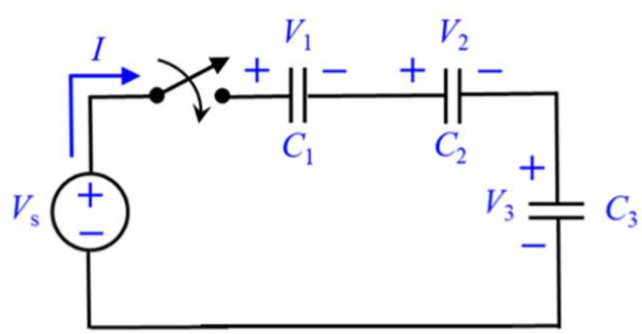

Assume that all capacitors are initially uncharged. Since the capacitors are in series, they will experience the same current I from the voltage source Vs when the switch is closed. Therefore, each capacitor stores the same amount of charge q at any instant after the switch is closed. This charge is also the same if we replace all the capacitors with an equivalent Ceq .

$q = C\text{eq}V\text{s} = C1V1 = C2V2 = C3\text{V}3,$ (1)

where

$1/C\text{eq} = 1/C1 + 1/C2 + 1/C3$

From Equation (1), the voltages across capacitors are:

$$V_1 = \left(\frac{C_{eq}}{C_1}\right)V_s \qquad V_2 = \left(\frac{C_{eq}}{C_2}\right)V_s \qquad V_3 = \left(\frac{C_{eq}}{C_3}\right)V_s$$

B. Response of RC Circuit

A circuit with resistor R and capacitor C in series is a first-order resistor-capacitor circuit (RC circuit), as shown in Figure 4. The capacitor voltage Vout will respond to a step input voltage, implemented by a power supply in series with a switch.

Figure 4 – RC Circuit

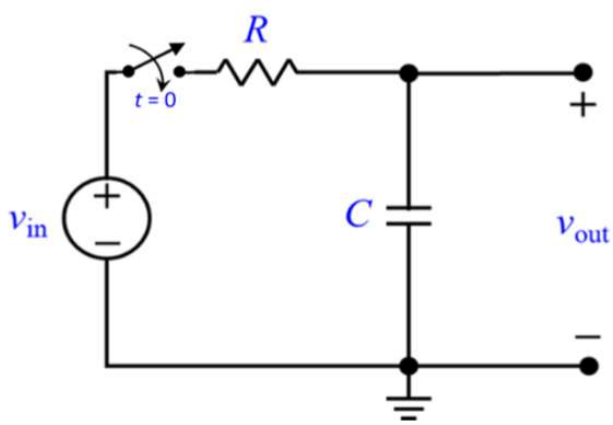

For example, if the switch closes at $t = 0$, the input voltage vin jumps from 0 V to Vm instantaneously. How fast the capacitor voltage responds is characterized by a time constant: $\tau = RC$. If the capacitor is initially uncharged, it will approach being fully charged (v) ® $V*$) after a few time constants. On the other hand, if the capacitor is initially charged, and the power supply voltage is set to zero (or removed and by connecting the switch to ground), the capacitor will approach being fully discharged (v) ® 0) after a few time constants. Figure 5 shows the charging and discharging of a capacitor C as illustrated by its voltage behavior versus time.

Figure 5 – Capacitor charging and discharging, showing the values of Vc(t) at $t = \tau$

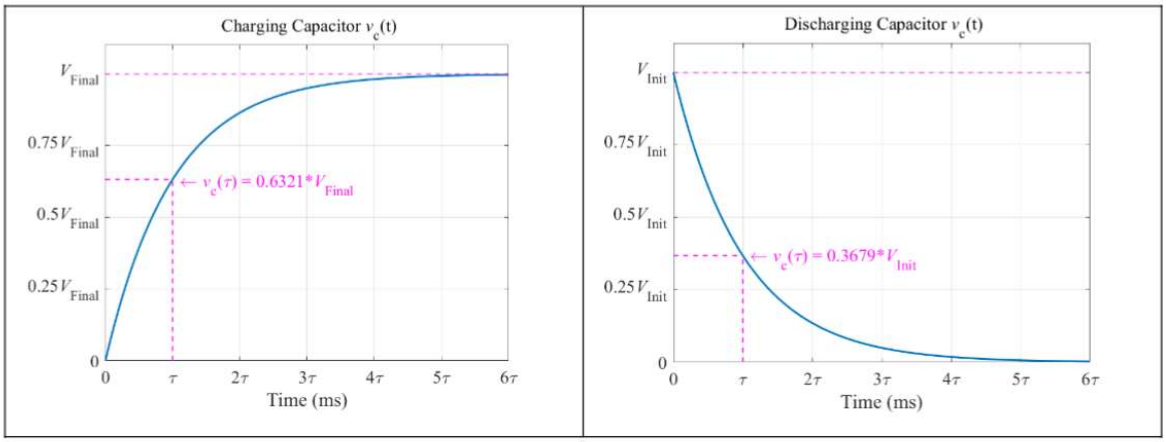

In the charging cycle, the capacitor voltage increases from 0 V to V+,-./ . Theoretically, V+,-./ = V* . From your lectures and the notes below, you learned that at $t = \tau$, the capacitor voltage v) (τ) = (1 − e 0')V1 = 0.6321V1 . In the discharging cycle, the capacitor voltage decreases from V2-,3 to 0 V. When $t = \tau$, the capacitor voltage decreases to v) (τ) = e 0' V2-,3 = 0.3679V2-,3 . The time at which the capacitor voltage reaches 63.21% of the final value V+,-./ for the charging cycle or 36.79% of the initial value V2-,3 for the discharging cycle is how the time constant τ of an RC circuit is measured. Theoretically, it is sufficient to determine the time constant τ using 63.21% of V+,-./ or 36.79% of V2-,3 . However, accurately measuring the time constant τ with an oscilloscope is difficult. Most oscilloscopes have a built-in function to automatically obtain the rise time trise or fall time tfall of input signals.

Figure 6 – Rise and Fall Times

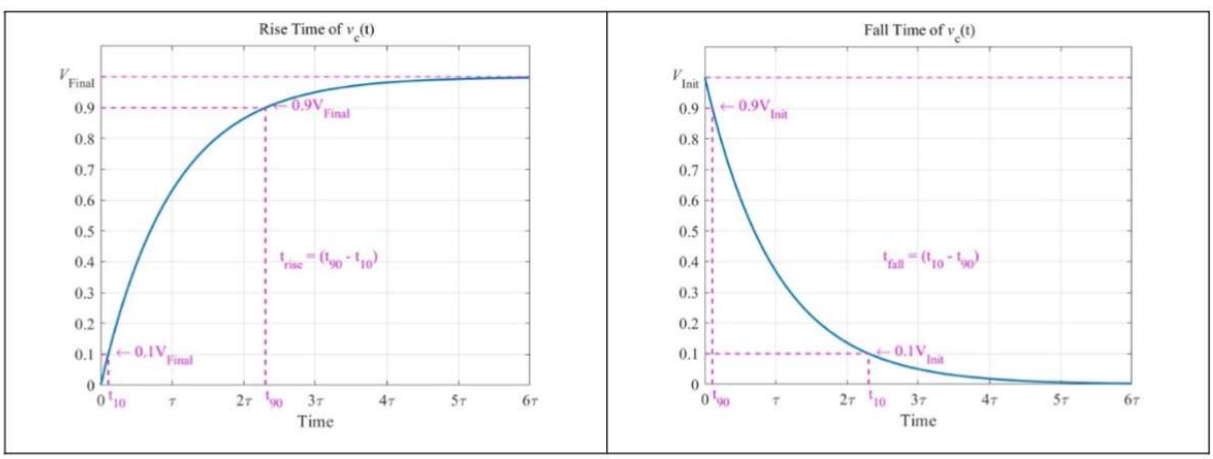

Using trise or tfall is an alternative way to measure reasonably accurate value of τ. The rise time trise is the time interval between 10% and 90% of the final input value, whereas the fall time tfall is between 90% and 10% of the initial input value.

With the initial voltage $v_c(0) = 0$, the voltage across the capacitor in **Figure 4** is

$$v_C(t) = V_{Final} + [v_c(0) - V_{Final}]e^{-t/\tau} = V_{Final} - V_{Final}e^{-t/\tau},$$

$$v_C(t) = V_{Final}\left(1 - e^{-t/\tau}\right).$$

At 10% of the final value V_{Final},

$$v_C(t_{10}) = 0.1\, V_{Final} = V_{Final}\left(1 - e^{-t_{10}/\tau}\right)$$

$$\Rightarrow t_{10} = [ln(10) - ln(9)]\tau$$

Similarly, at 90% of the final value V_{Final},

$$v_C(t_{90}) = 0.9\, V_{Final} = V_{Final}\left(1 - e^{-t_{90}/\tau}\right)$$

$$\Rightarrow t_{90} = \tau\, ln(10)$$

The rise time t_{rise} is defined by

$$t_{rise} = t_{90} - t_{10} = ln(10)\,\tau - [ln(10) - ln(9)]\tau$$

$$\Rightarrow \tau = \frac{t_{rise}}{ln(9)} \qquad (2)$$

For discharging, the voltage across the capacitor is given by

$$v_C(t) = V_{Init}e^{-t/\tau}$$

At 90% of the initial value V_{Init},

$$v_C(t_{90}) = 0.9\, V_{Init} = V_{Init}e^{-t_{90}/\tau}$$

$$\Rightarrow t_{90} = [ln(10) - ln(9)]\tau$$

Similarly, at 10% of the initial value V_{Init},

$$v_C(t_{10}) = 0.1\, V_{Final} = V_{Final}e^{-t_{10}/\tau}$$

$$\Rightarrow t_{10} = \tau\, ln(10)$$

The rise time t_{fall} is defined by

$$t_{fall} = t_{10} - t_{90} = ln(10)\,\tau - [ln(10) - ln(9)]\tau$$

$$\Rightarrow \tau = \frac{t_{fall}}{ln(9)} \qquad (3)$$

Therefore, we can obtain a reasonably accurate value of a time constant τ using the rise time trise or the fall time tfall based on Equations (2) and (3).

III. Prelab Assignment:

A. Part 1 – Test Equipment

1. Read the manual of Digital Multimeter (Multimeter_EDU34450-90002) from page 16 onward to understand how to measure capacitance.

2. Read the manual of Waveform Generator (WaveformGenerator_EDU332102A) from page 16 onward to understand how to set up different waveforms, such as square or sine waves.

3. Read the manual of Digital Oscilloscope (Oscilloscope_EDUX1052G_97014) from page 16 onward to understand how to set up input channels to capture and measure a waveform.

B. Part 2 – RC Circuit

1. Select 3 capacitors (C1 to C3) between 0.5 μF to 5 μF from the typical capacitance values in Table 1. These values will be given to you by your TA.

C1 = 1μF C2 = 1.5μF C3 = 5μF
C = 0.1 μF $R1$ = 600Ω $R2$= 800Ω $R3$= 1 kΩ.

2. Create a MATLAB script with Vs = 2V.

a. Determine the voltages across the capacitors in Figure 3.

```
clear all
close all
Vs = 2;
C1 = 1e-6;
C2 = 1.5e-6;
C3 = 5e-6;
Ceq = inv(inv(C1)+inv(C2)+inv(C3));
V1 = (Ceq/C1)*Vs
V2 = (Ceq/C2)*Vs
V3 = (Ceq/C3)*Vs
```

V1 = 1.0714 (V)

V2 = 0.7143 (V)

V3 = 0.2143 (V)

b. Calculate the time constant τ of an RC circuit in Figure 4 (using one of the chosen capacitors as C) with 3 different values of R given to you by your TA.

```
C = 0.1e-6;
R1 = 600;
R2 = 800;
R3 = 1000;
t1 = C*R1
t2 = C*R2
t3 = C*R3
```

t1 = 6.0000e-05

t2 = 8.0000e-05

t3 = 1.0000e-04

IV. Laboratory

Protocol for handling capacitors

• Wear the special gloves provided.

• As soon as you select a capacitor, make sure it is completely discharged by connecting (using alligator clips and without touching the leads) across a desktop or handheld DMM in VM mode and wait for the reading to go down to around 1 mV. Then switch it to AM mode to make sure the current goes down to 0. Now the capacitor is completely discharged.

• Measure the capacitance using the DMM.

• Discharge the capacitor using the DMM in AM mode only, as the DMM has slightly charged it for the capacitance measurement.

• Now you can connect the caps WITHOUT connecting the power supply (by leaving its positive terminal unconnected). This is to ensure the caps do not pick up any charges before you are ready to measure the voltages. The entire lab is based on the assumption that each capacitor is initially uncharged.

• You can then follow the procedure below to carry out the voltage measurements in part A of the lab, making sure to discharge each capacitor completely again before you build the RC circuit for part B.

A. Capacitors in Series

1. Use the digital multimeter to measure the resistor (from the decade box) and capacitor values chosen in the prelab assignments. To measure capacitance, set the impedance of the multimeter to AUTO. Record their measured values in Table 2 below.

Table 2 – Capacitance and Resistance Values

	C1 (μF)	C2 (μF)	C3 (μF)
Nominal Values	1	1.5	5
Measured Values	1.059	1.49	5.03

	R1 (k_)	R2 (k_)	R3 (k_)
Nominal Values	100	200	400
Measured Values	100.2	200.2	399.9

2. With the measured values of C's, use the MATLAB script to recalculate the voltage across each capacitor in Figure 3. Record the theoretical results in Table 3.

3. Build the circuit in Figure 3 with Vs = 2V. After the power supply is turned on, measure the voltage across the power supply output terminals and that across the terminals of the series capacitor combination, making sure the readings are stable and the voltage across the series combination is very close to that across the power supply. Connect the DMM in voltage mode across each capacitor and record the reading within ONE SECOND after the connection is made. This rapid voltage reading is to minimize the capacitor discharge through the DMM. After measuring the voltage across one capacitor, wait for about

10 seconds before connecting the DMM to measure the voltage across another capacitor. This waiting period allows the capacitors to return to their original voltages. Record all measurements in Table 3.

Table 3 – Capacitance Voltage Measurements

	Theoretical (V)	Measured (V)	Percent Error (%)
V1	1.041	1.005	-3.458
V2	.7399	.71365	-3.548
V3	.2192	.21187	-3.344

Theoretical Measured Percent Error V 1 V 2 V 3 4. If there are any discrepancies, explain.
There are no discrepancies as they are all pretty close. The capacitor still does hold a little charge so that's where the minor differences come from.

B. RC Circuit

1. Build the RC circuit in Figure 4 with the resistance decade box R and one of the capacitors from the preceding section, making sure that the capacitor is fully discharged by using the procedure described above.

2. Instead of a power supply, a waveform generator is used to ensure the initial capacitor voltage in the discharging cycle is the same as (or very close to) the voltage of the fully charged capacitor in the charging cycle, resulting in a more accurate determination of the fall time.

3. Use a square wave as vin : 1 V peak-to-peak with 0.5 V offset (or simply, voltage at 0 or 1 V in each period), frequencies of 100Hz, 200Hz, 300Hz, 400Hz, and 500Hz, and 50% duty cycle.

4. Connect one channel of the oscilloscope to measure vout . Record the vout waveform for each square wave frequency.

5. Choose one of the frequencies to determine the time constant τ by measuring trise of the voltage across the capacitor. Record the rise time measurements and calculate the time constant τ for three different R values.

6. For the chosen frequency, determine the time constant τ by measuring tfall of the voltage across the capacitor. Record the fall time measurements and calculate the time constant τ for same R values as in part 5.

7. Take the average of τ from parts 5 and 6 for computing the percentage error.

8. Enter all your data for the chosen frequency in Table 4.

Table 4 – Time Constant Measurements

Measured R	Calculated τ = RC	Measured $\tau = tr/ln(9)$	Measured $\tau = tf/ln(9)$	Avg of fall and rise	Percent Error
100.2	1.0611e-4	1.4108e-4	1.3881e-4	1.3994e-4	31.882%
200.2	2.1201e-4	2.2301e-4	2.3029e-4	2.2665e-4	6.905%
399.9	4.2349e-4	4.1188e-4	4.1188e-4	4.1188e-4	-2.742%

9. If there are any discrepancies, explain.

There is a large difference between the error of R1 and R2 or R3. R2 and R3 are pretty close but R1 is way higher. This is likely due to the resistance value being so small that measurements aren't as accurate. The higher the resistance value, the more accurate the measurement gets.

Make sure to check off with the TA before leaving the lab section.

V. Laboratory Report: Include the measurements, computations, and answers to questions from the laboratory procedure. Clearly label all steps.

100 hz for resistor 1 (100 ohms):

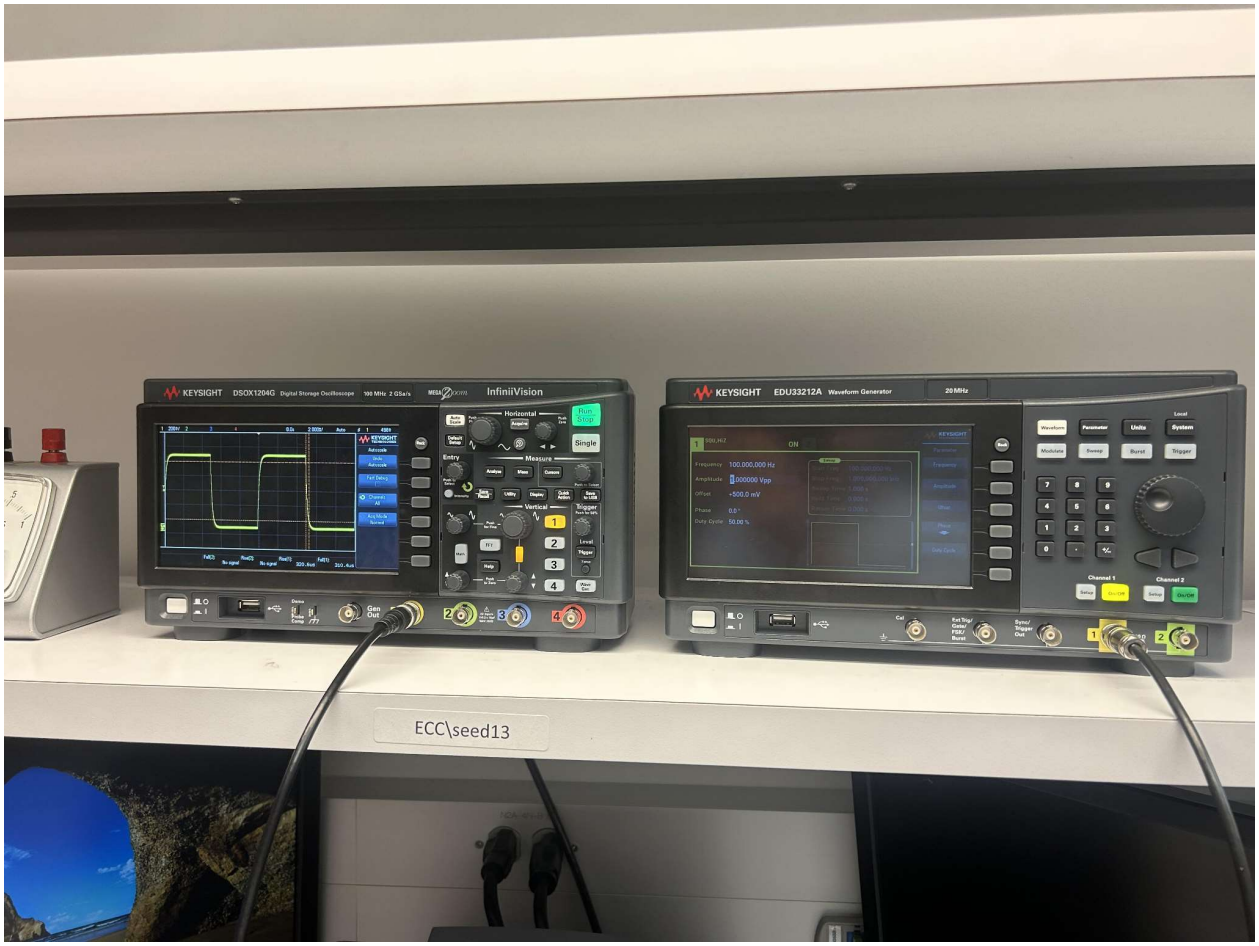

200 hz for resistor 1 (100 ohms):

300 hz for resistor 1 (100 ohms):

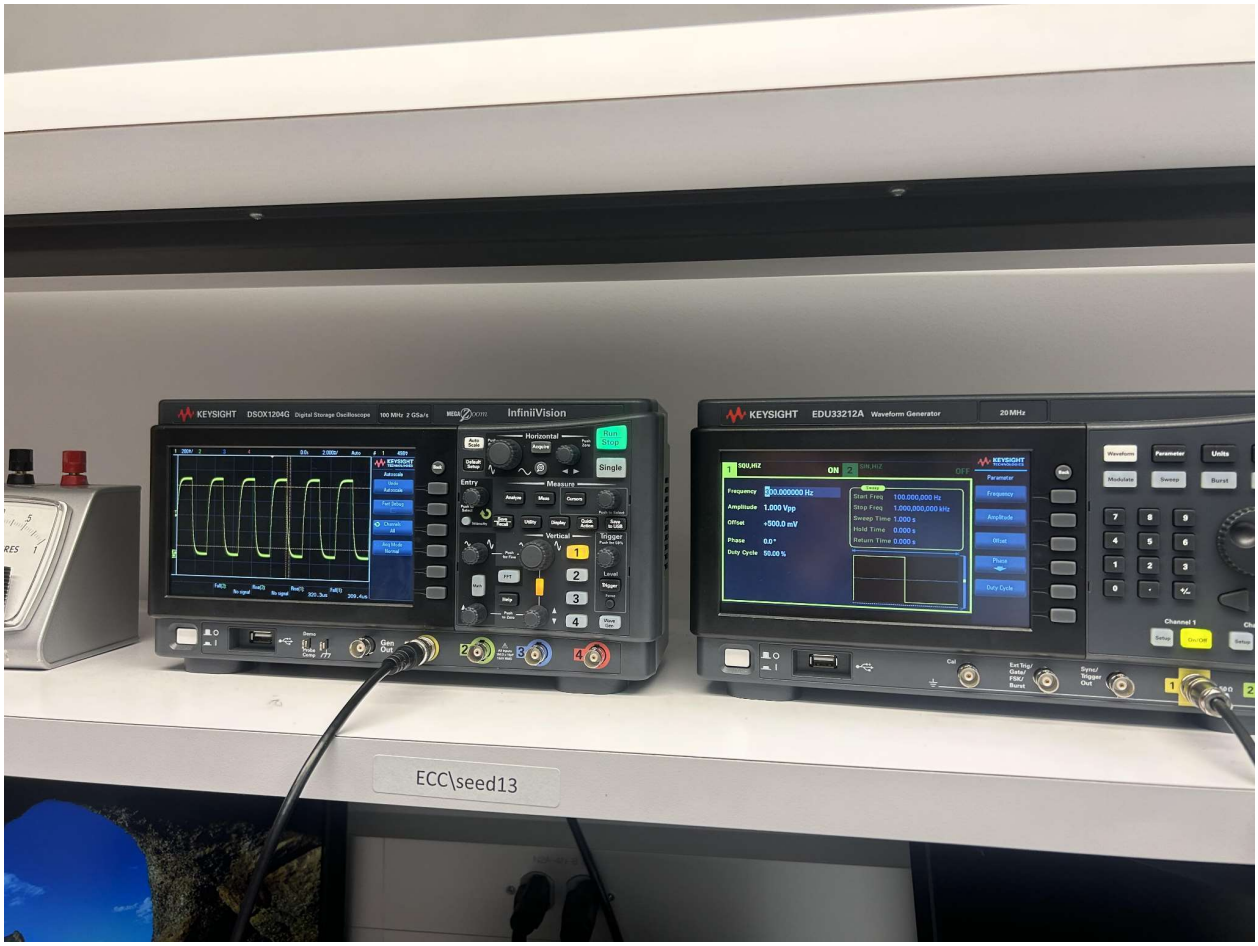

400 hz for resistor 1 (100 ohms):

500 hz for resistor 1 (100 ohms):

KEYSIGHT
DSOX1204G Digital Storage Oscilloscope
100 MHz 2 GSa/s
InfiniiVision
Horizontal
Run Stop
Single
Measure
Vertical
Trigger
KEYSIGHT
EDU33212A Waveform Generator
20 MHz
Waveform
Parameter
Units
System
Modulate
Sweep
Burst
Trigger
Channel 1
Channel 2
ECC\seed13